Ebara End Suction Volute Pump — Model FSA

Performance Chart and Model Code — 50 Hz

Performance Chart - 4 Poles - 50 Hz

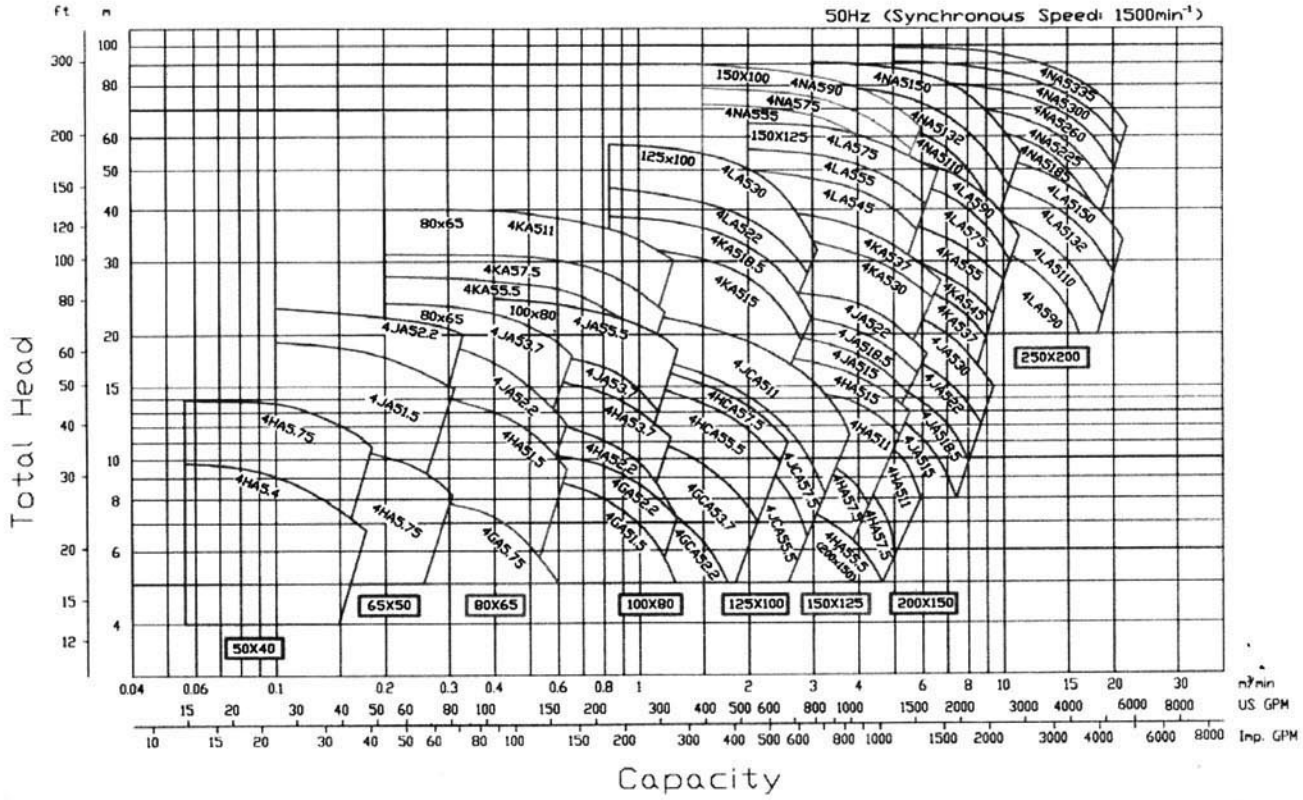
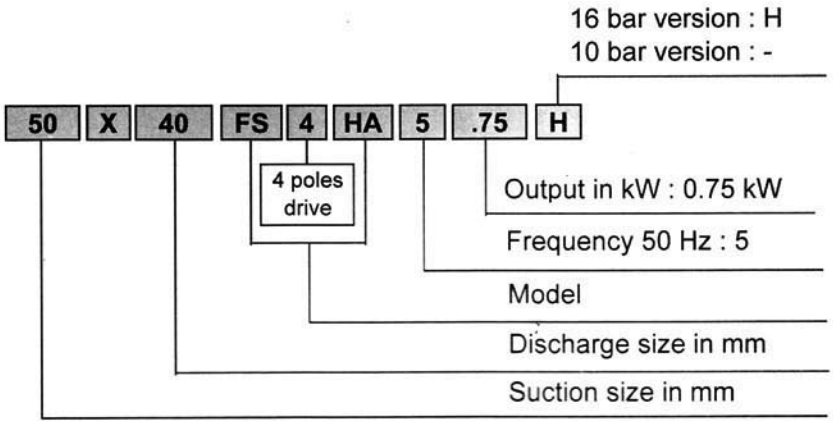
Model Code - 4 Poles - 50 Hz